HP25 INK DISPENSER

COLOUR MANAGEMENT EQUIPMENT

VALE-TECH

Dispensing Solutions Worldwide

www.vale-tech.com

Suitable for UV and Conventional Offset inks , Concentrates, Plastisols, and High Viscosity Materials

HP2516

Applications

The HP25 is a high duty ink dispenser designed for 24/7 operation. Its compact design, high accuracy and ease of use make it the ideal system for inplant colour blending.

The HP series is designed to dispense difficult HIGH VISCOSITY inks in batch sizes of 100g to 10Kg.

Benefits

Compact high accuracy, high performance dispenser with a small footprint, requiring the minimum of space. High reliability and low maintenance. Installation is virtually plug and play.

Remote access feature allows direct link with the ink supplier, colour centre and the Technical Support Team providing on-line training and software maintenance.

The Vale-Tech Ink Manager™ software ensures complete control of the dispensing and colour blending process.

Features

- PANTONE® *licensed software.*
- *Long life dispense valves, incorporating Teflon seals and anti-drip nozzles.*
- *Incorporates the Vale-Tech range of high accuracy, stainless steel enclosed balances.*
- *Fixed ink reservoirs of 25kg capacity*
- *Up to 24 ink reservoirs*
- *Blending colour batches from 100g to 25kg to an accuracy of +/- 0.1g*
- *Ink reservoir incorporates ink level sensor, real time ink levels with low ink warnings.*
- *Agitation option*

The modular design of the HP series allows complete flexibility for any configuration of ink containers.

For example: By linking external pumps to the HP25, high usage colours or coatings can be dispensed from BULK containers such as 180kg drums, totes and IBCs.

PANTONE® *is a registered trademark of Pantone, Inc.*

HP25 INK DISPENSER

COLOUR MANAGEMENT EQUIPMENT

VALE-TECH

Dispensing Solutions Worldwide

www.vale-tech.com

TECHNICAL INFORMATION

Model HP25: Medium Batch Dispenser
Colour blending of 100g to 25kg batches.

Main module:

	W=55" (1400 mm)	Ship (1550 mm)
12-16 pot	D=64" (1620 mm)	(1700 mm)
	H=63" (1595 mm)	(1675 mm)

Each 4 pot extension add
D=23" (580 mm) ship (680 mm) W & H
as main unit.

Unladen weight: 475Kg Crated weight: 575Kg

Extension: 100Kg Crated weight: 170Kg

No. of reservoirs: Up to 24 x 25Kg capacity
(configurable to allow colours to be doubled up as required)

Dispense Weigh range:
100g to 10Kg in (optional 25Kg)
increments of +/- 0.1 gm

Dispense valve: Air operated double actuator, fine/coarse, incorporating PTFE (Teflon) diaphragm seals.

Flow rate: Typically, 2-3Kg per minute.

Software: The Vale-tech Ink Manager™ software with auto-dispense extension.

System status and interlocks
Blend container placement and size detection
Blend quantity limiter
Low ink reservoir sensing
Low pressure air supply cut-off

Services
Electrical: 110—230v 50 Hz 4A/1000W
Air supply: 6-8 Bar (85-110 psi) clean and filtered

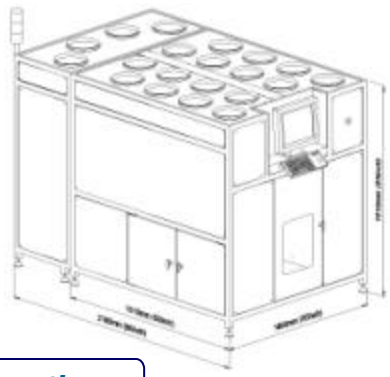

Machine options

CQ or VQ AUTO-FEED Queuing systems to be added to your dispenser, allowing up to 12 blends to be produced automatically and seamlessly.

LV205-10 Bulk material extension. 205 litre drum dispenser to deliver high usage materials from drums.

LLK Remote access pack. Either telephone or server based communications utilising Laplink PC software. Includes headset and camera.

SP-1 Scan Pack. Barcode labelling and scanning package. Includes barcode label printer, laser printer,hand-held laser scanner and software.

SP-2 As SP-1 but excludes laser printer.

SL Spectro link to Gretag, X-Rite® and Datacolor systems

HP25-25Kg balance upgrade. High capacity balance assembly allow blends of up to 25Kg (5 gallons).

HP25-AG Ink vessel agitator (stirrer) comprising air motor and mixing paddle.

'Easy fill option provides quick and clean refilling from standard Ink Supplier containers'

HP25 Series of Dispensers

HP2512 comprises 10Kg Balance, 12 double actuator dispense valves and 12 x 25Kg reservoirs.

HP2516 comprises 10Kg Balance, 16 double actuator dispense valves and 16 x 25Kg reservoirs.

HP2520 comprises 10Kg Balance, 20 double actuator dispense valves and 20 x 25Kg reservoirs.

HP2524 comprises 10Kg Balance, 24 double actuator dispense valves and 24 x 25Kg reservoirs.

PANTONE® *is a registered trademark of Pantone, Inc.*

Manufactured by VALE-TECH LTD
Unit 12, Depot Road, Newmarket, Suffolk, CB8 0AL, UK
e-mail : sales@vale-tech.com
TEL: +44 (0)1638 668583 FAX: +44 (0)1638 676720
www.vale-tech.com